Advanced Combustion Chemistry for Gas Turbines

6th CHEMKIN Symposium
Montreal, Canada
August 3, 2008

Scott A. Drennan, P.E.
Applications Engineering Director
sdrennan@reactiondesign.com

Outline

- Modern Combustion Design Challenges and Simulation
- Using Equivalent Reactor Networks
- Using CHEMKIN-PRO with Equivalent Reactor Networks
- Pitfalls for Equivalent Reactor Networks
- Future Product Development
- Summary

reaction DESIGN

Outline

- **Modern Combustion Design Challenges and Simulation**
- **Using Equivalent Reactor Networks**
- **Using CHEMKIN-PRO with Equivalent Reactor Networks**
- **Pitfalls for Equivalent Reactor Networks**
- **Future Product Development**
- **Summary**

reaction DESIGN

Modern Combustor Challenges

- **Dry Low NOx designs lead to new combustion challenges**
  - Stability (LBO and Flashback)
  - Ignition
- **New fuels**
  - US Air Force F-T certification
  - Commercial aircraft alternative fuel certification
- **New ICAO regulations for aircraft**
- **New particulate regulations in airports**
  - Size and mass emissions regulated
- **No tool available to accurately simulate fuel effects on emissions and stability**

reaction DESIGN

Combustion System Guarantees

- **Emissions**
  - NOx
  - CO
  - UHC (VOC)
  - Soot
- **Fuel Flexibility**
- **Combustion Stability**
  - Lean Blow Off
  - Flashback
  - Ignition

All of these factors are driven by detailed chemistry

reaction DESIGN

Sustainable Fuels Have Different Chemical Characteristics

- **Syngas from IGCC**
- **Opportunity Fuels**
  - Blast Furnace Gas
  - Landfill Gas
- **Coal-derived, F-T fuels**
- **Oil-sand derived fuels**
  - High in aromatics
- **Bio-fuels**
  - High in methyl esters
  - Sources differ regionally and are changing

Syngas and Fischer-Tropsch

Bio-Diesel

Biomass and Waste Fuels

reaction DESIGN

Cost and Time for Engine Tests Make Simulation Attractive

- **Performance and emission requirements drive combustor testing**
  - 10-20 tests per typical combustor design
  - $50k-200k per test
- **Accurate simulation of emissions and stability**
  - Reduces engine testing costs
  - Improves speed-to-market of new designs

Empirical Estimation

Detailed Simulation

Experimental Data

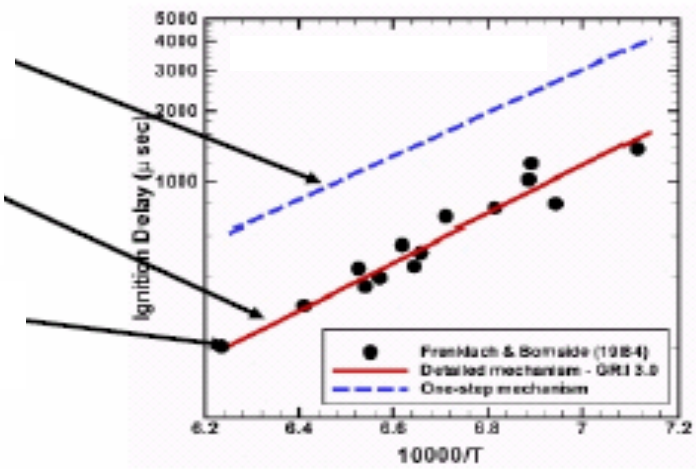

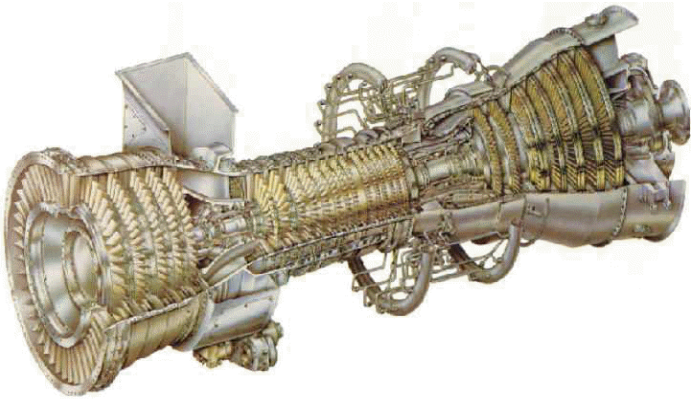

reaction DESIGN

Gap Exists in Combustor Design Workflow

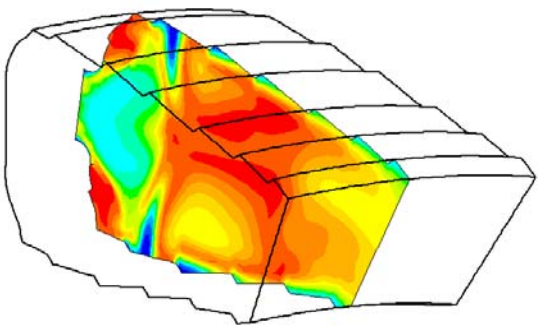

Goal:
Minimize emissions while maximizing performance

CFD Simulation:
Determine effects of injector design and location and combustor geometry on flow field

Core Focus at Reaction Design

Workflow incomplete because CFD cannot predict chemistry effects

Test:
Determine emissions, stability and fuel effects

reaction DESIGN

Commercial Combustion Simulation

	1990	2000	Today
CPU Speed	MHz	500MHz	GHz (parallel)
CFD Grids	100k	1 M	20 M
Turbulence	k-ε	Adv. k-ε	LES
Chemistry	1-step	2-step	1 to 9-step
Run Time	1 day	1 day	1 day
Mechanism Rxns	hundreds	thousands	10 thousand

- **What do you get with bigger mechanisms?**
  - NOx, CO, UHC
  - Ignition, Lean Blow Off, Flashback
  - Soot

reaction DESIGN

Comparison of CFD and Sophisticated Reactor Modeling

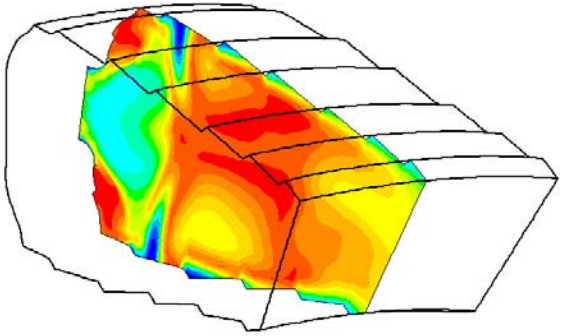

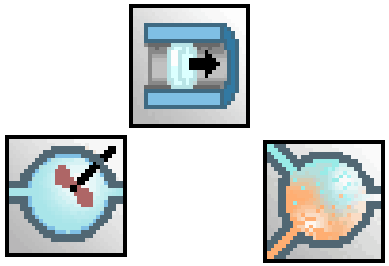

Computational Fluid Dynamics

- Geometry resolution
- 3-D flow field representation
- Accurate prediction of mass flows
- Accurate heat transfer
- **Simplified chemistry**

1-D CHEMKIN Reactor Modeling

- Full chemistry details
- Accurate prediction of trace chemical species
  - Pollutants
  - Soot pre-cursors
- Accurate ignition chemistry
- **Simplified geometry and flow field**

reaction DESIGN

Outline

- Modern Combustion Design Challenges and Simulation
- **Using Equivalent Reactor Networks**
- Using CHEMKIN-PRO with Equivalent Reactor Networks
- Pitfalls for Equivalent Reactor Networks
- Future Product Development
- Summary

reaction DESIGN

Using Equivalent Reactor Networks (ERNs)

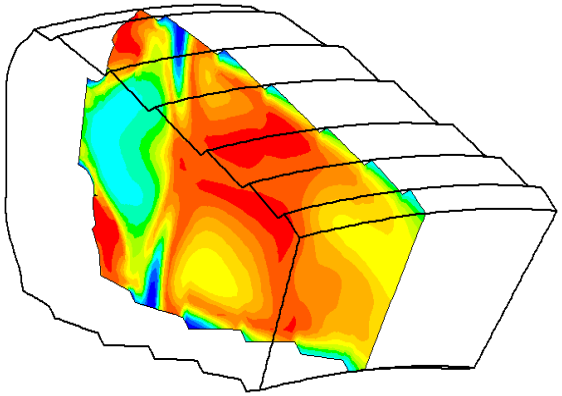

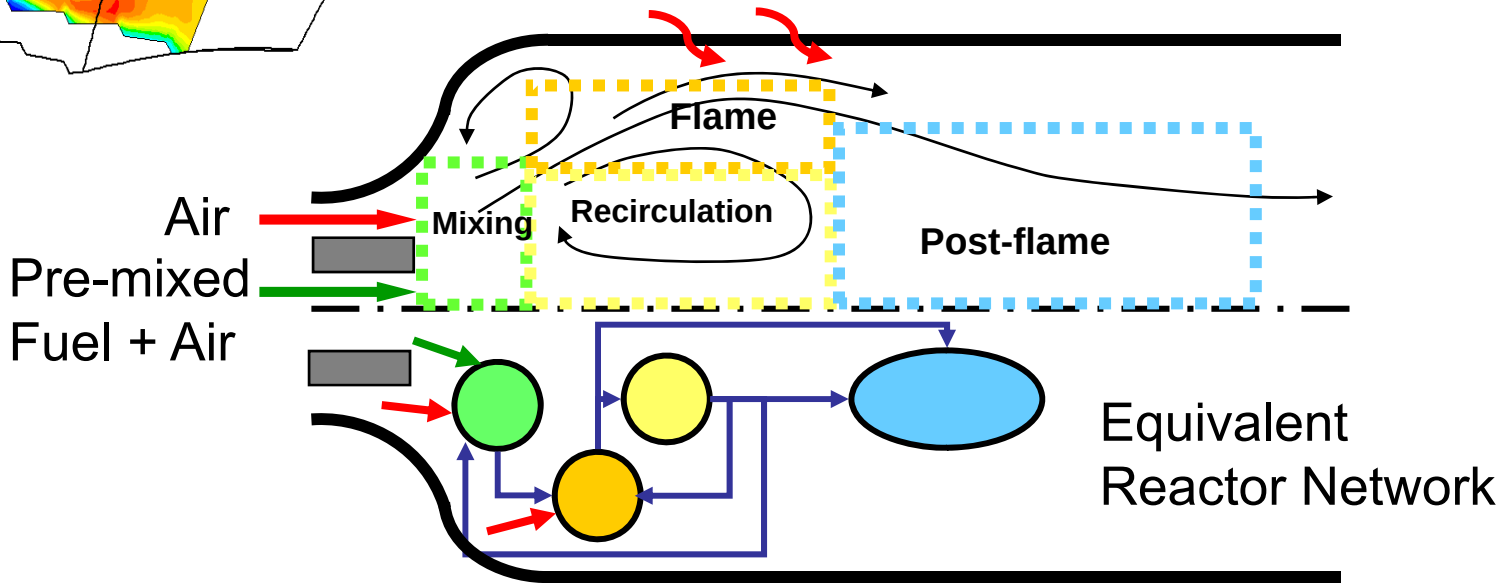

reaction DESIGN

Accurate ERNs are Complex

- **Gas turbine combustor ERN created from CFD solution**

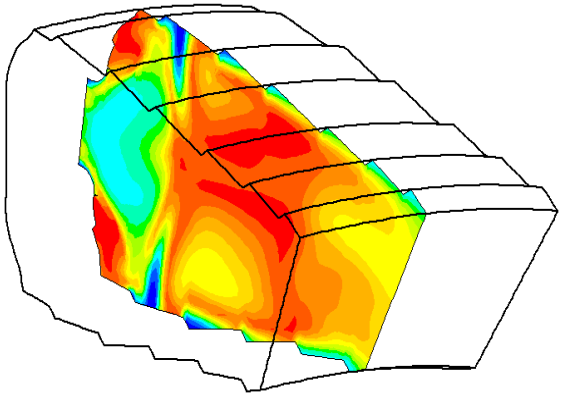

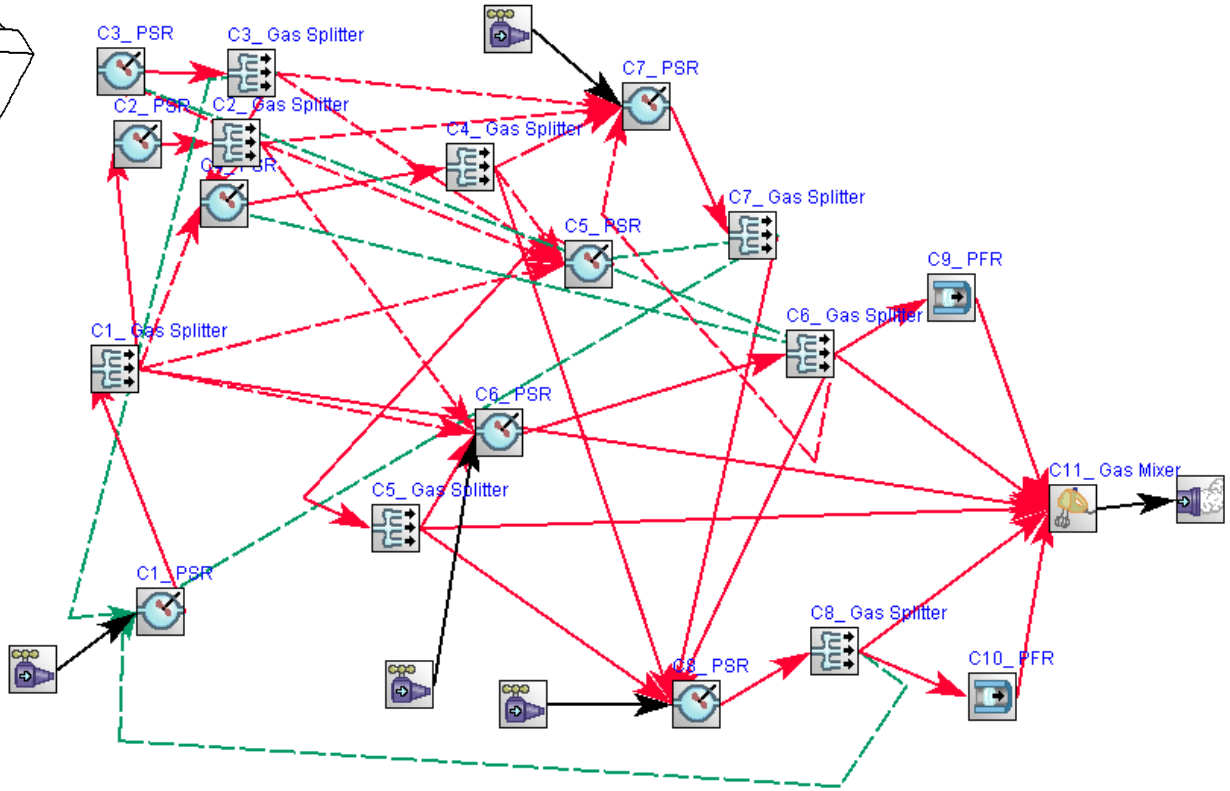

reaction DESIGN

Gas Turbine Industry Use of ERN's

- **Many manufacturers are using ERNs in their design process**
- **ERN's are created by hand**
  - Created by experts in detailed chemistry
  - Takes between weeks to months to create ERN for one CFD case
- **Well constructed ERN provides valuable emissions prediction platform**
- **Difficult to link ERN results back onto combustor geometry**

reaction DESIGN

Key Value Points from ERN Analysis

- **Accurate and rapid emissions predictions**
  - NOx, CO, UHC
  - Soot mass emissions and size distributions
- **Ability to determine split of NOx**
  - Thermal NOx
  - Prompt NOx
  - Other NOx pathways
- **Platform for combustion stability analysis**
  - Lean Blow Off
  - Flashback
  - Ignition
- **Particulate/Soot formation and prediction**

reaction DESIGN

Combustion Stability & Detailed Chemistry

- **Reactor network and detailed chemistry approach will lend itself well to stability studies**
- **Industry currently uses CHEMKIN Reactor approach for global stability analysis**
  - Combustion stability is a local phenomena
- **Isolate the flame region**
  - Conduct detailed chemical kinetic analysis

- **Accurate chemistry applied locally accurately predicts:**
  - Lean Blow Off
  - Flashback
  - Local Ignition

reaction DESIGN

Outline

- Modern Combustion Design Challenges and Simulation
- Using Equivalent Reactor Networks
- **Using CHEMKIN-PRO with Equivalent Reactor Networks**
- Pitfalls for Equivalent Reactor Networks
- Future Product Development
- Summary

reaction DESIGN

Our Latest Product: CHEMKIN-PRO™ for Clean Technology

- **Power version of *de facto* chemistry standard for power users**
- **Speed improvement reduces solution time from *Days-to-Hours* or from *Hours-to-Minutes***
- **Enables use of more accurate chemistry in demanding applications**
- **Full feature set:**
  - Realistic Reactor Networks
  - Soot/Particle Tracking
  - Uncertainty Analysis
  - Reaction Path Analyzer

Efficiently use enough chemistry to simulate:

- Ignition & Flame Speed
- Emissions (NOx, CO, UHC)
- Soot/Particulate Behavior
- Aftertreatment Systems

reaction DESIGN

Speed for Modern Designs

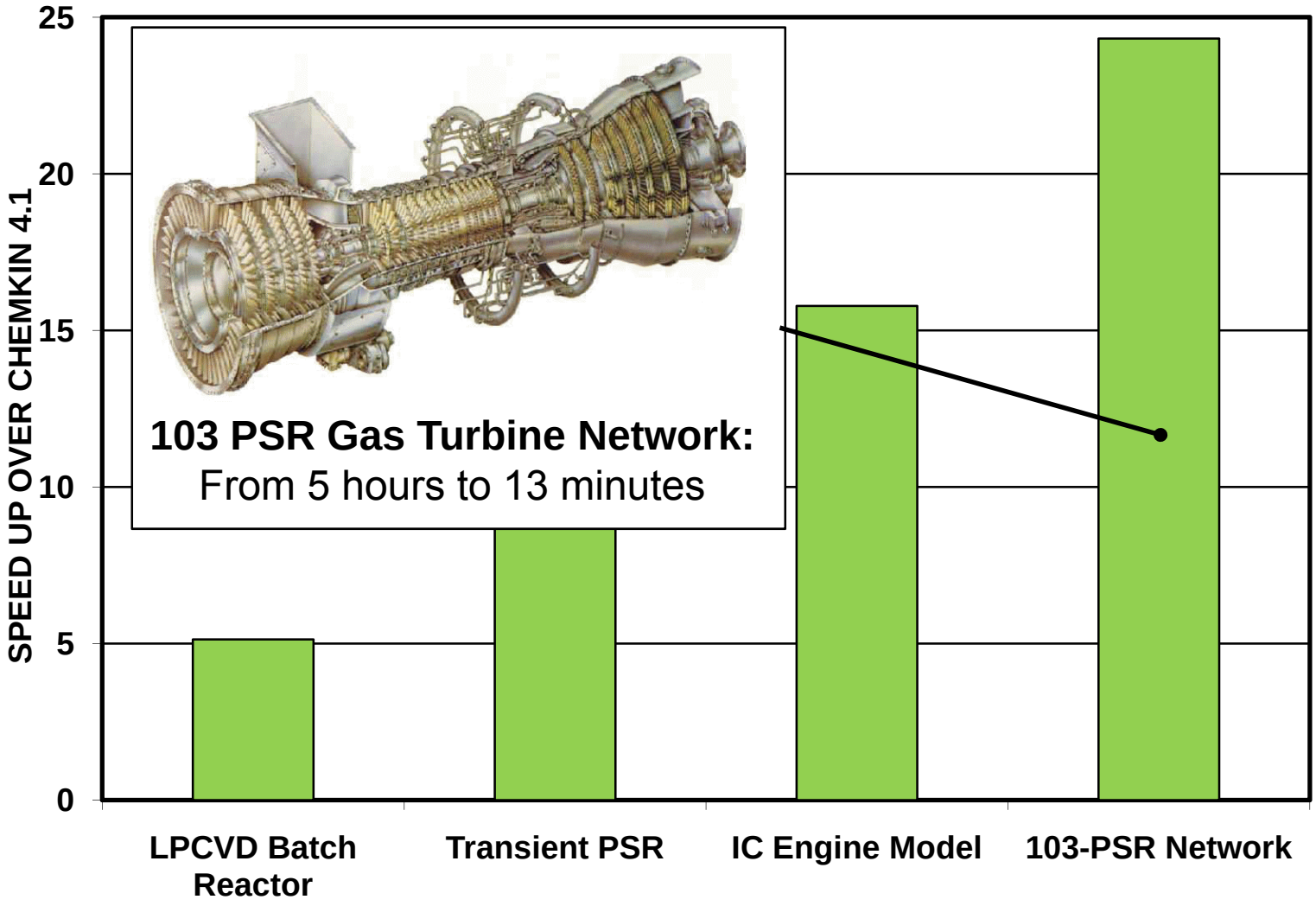

Using CHEMKIN-PRO with ERN's

- **Drag and Drop to create ERN**
- **Linking reactors with forward and recirculating flows**
- **Use ERN to predict emissions**
- **Investigate specific reactors for behavior**
  - NO formation
  - CO quenching
  - HCN formation
- **Perform Parameter Studies**
- **Change fuel mechanisms to see affects**
- **Track soot formation with Particle Tracking feature**
- **Uncertainty Analysis**

reaction DESIGN

New Feature: Uncertainty Analysis

- **What are the error bars on my simulation results?**
- **How will variations in my input parameters affect my final results?**
- **Which inputs in my model most affect the uncertainty of my results?**
- **My answer is 4.2ppm NOx …**
  - Is that ± .1ppm, ± 1ppm, or ± 10ppm
- **What are my sources of error?**
- **Uncertainty Analysis enables better technical and business decisions**

reaction DESIGN

Uncertainty Analysis

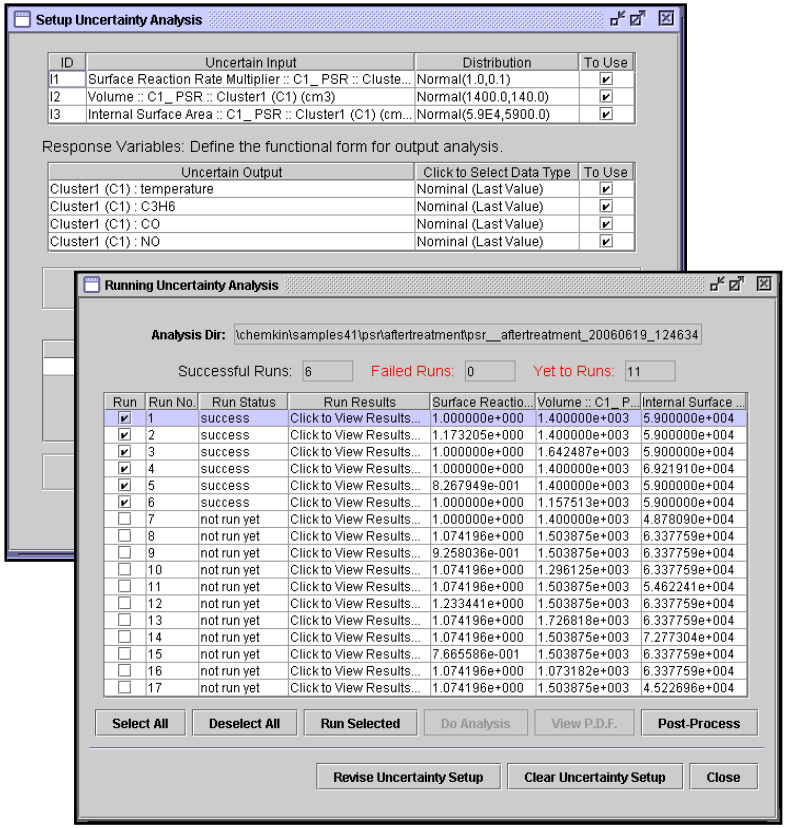

- **Enter input uncertainty**
- **Track how it propagates through the model**
- **Output PDFs generated**
  - Based on uncertainty of inputs

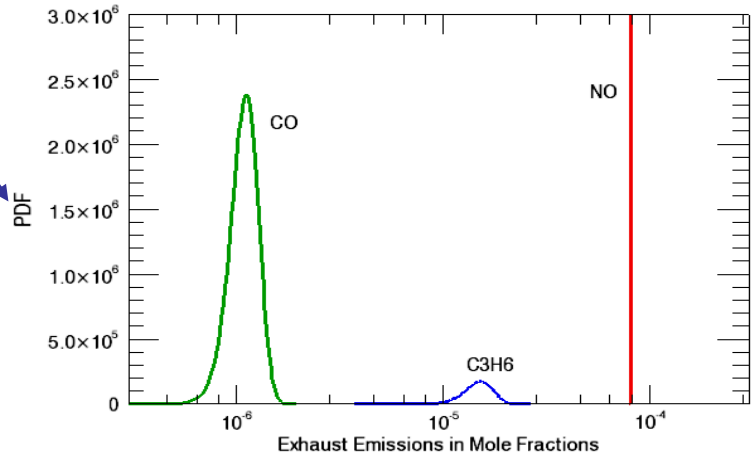

reaction DESIGN

Outline

- Modern Combustion Design Challenges and Simulation
- Using Equivalent Reactor Networks
- Using CHEMKIN-PRO with Equivalent Reactor Networks
- **Pitfalls for Equivalent Reactor Networks**
- Future Product Development
- Summary

reaction DESIGN

Pitfalls of Working with ERN's

- **Time consuming development of the ERN**
- **Impossible to adjust ERN creation algorithm quickly to see impacts on results**
- **Accuracy in ERN representation of complex geometry and flow field**
- **Linking ERN results back onto combustor geometry**

reaction DESIGN

Outline

- Modern Combustion Design Challenges and Simulation
- Using Equivalent Reactor Networks
- Using CHEMKIN-PRO with Equivalent Reactor Networks
- Pitfalls for Equivalent Reactor Networks
- **Future Product Development**
- Summary

reaction DESIGN

New Product Development: Streamlined Approach to Link Chemistry and CFD

3-D CFD Solution

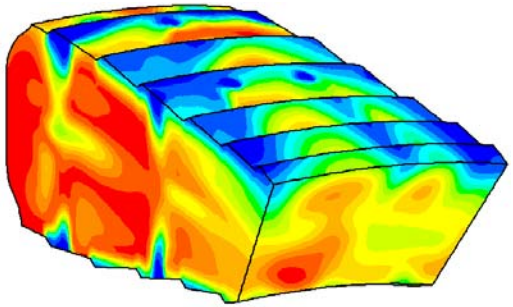

Automatically create ERN

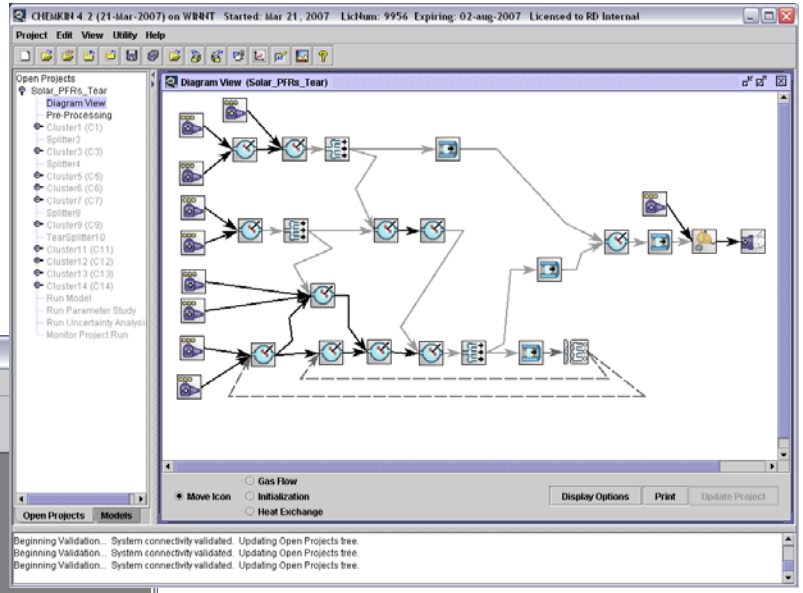

Map kinetics results onto geometry view

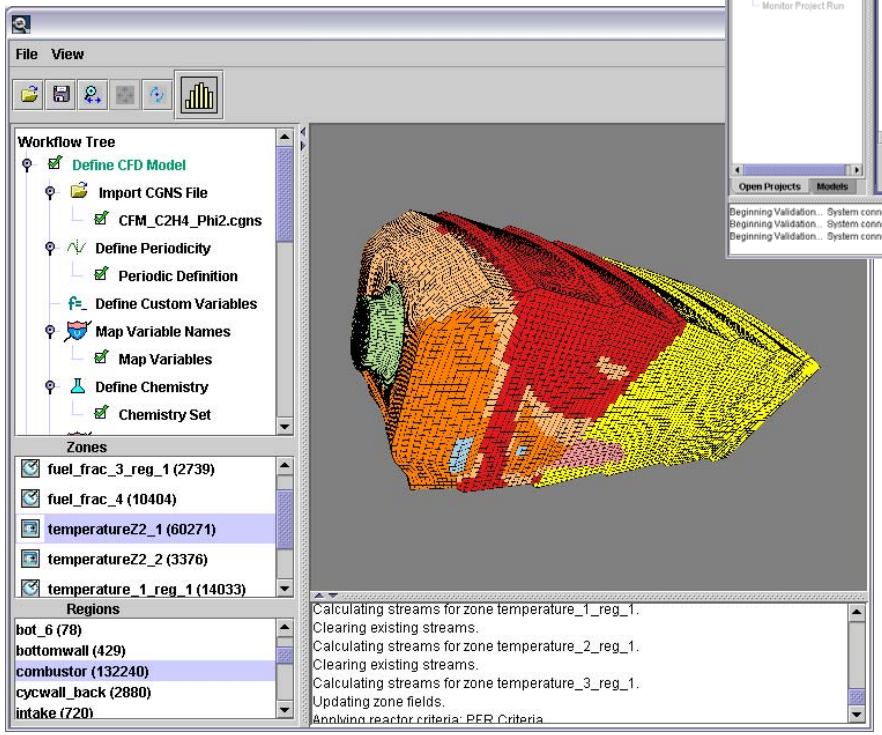

Map kinetics results onto geometry view

reaction DESIGN

Summary (1)

- **Mechanisms become more detailed to capture required effects**
- **Combustor designs are becoming more complex**
- **Sustainable fuels have different combustion properties not previously experienced**
- **Using detailed chemistry with ERN provides simulation accuracy**
  - Deriving ERN's from CFD enables accurate results
- **Creating ERN's from CFD is cumbersome**

reaction DESIGN

Summary (2)

- **Reaction Design developing a new tool for streamlined link between CFD and ERN analysis**
  - Currently in Beta testing with major engine manufacturers
- **Works with commercial CFD packages**
  - Reads in CGNS file
- **How can you get involved?**
- **Seeking fundamental validation cases (CFD + Experimental Data)**
  - Gas Turbines
  - Burners
  - Aftertreatment systems
- **Contact Reaction Design for more information**

reaction DESIGN

reaction
DESIGN

Thank You

LEADING THE WAY TO CLEAN COMBUSTION DESIGN

Extra Slides

reaction DESIGN

CFD and Detailed Chemistry Today

- **CFD widely accepted to provide:**
  - Aerothermal flow field simulation
  - Flame shape and temperatures with careful adjustments and global chemistry/reduced mechanism
- **Detailed chemistry widely accepted to provide:**
  - Design tool for emissions, flame-speed, ignition delay, etc. for idealized reactors
  - Networks of reactors are linked to represent “realistic” combustor geometry and flow field
  - Reactor networks built by hand by experts
- **No automated process to link geometry, flow, and detailed chemistry**

reaction DESIGN

Use ERN to Understand Emissions

Will animate these to fly-in

Soot inception, growth and oxidation

Exit Emissions (NOx, CO, UHC, Soot)

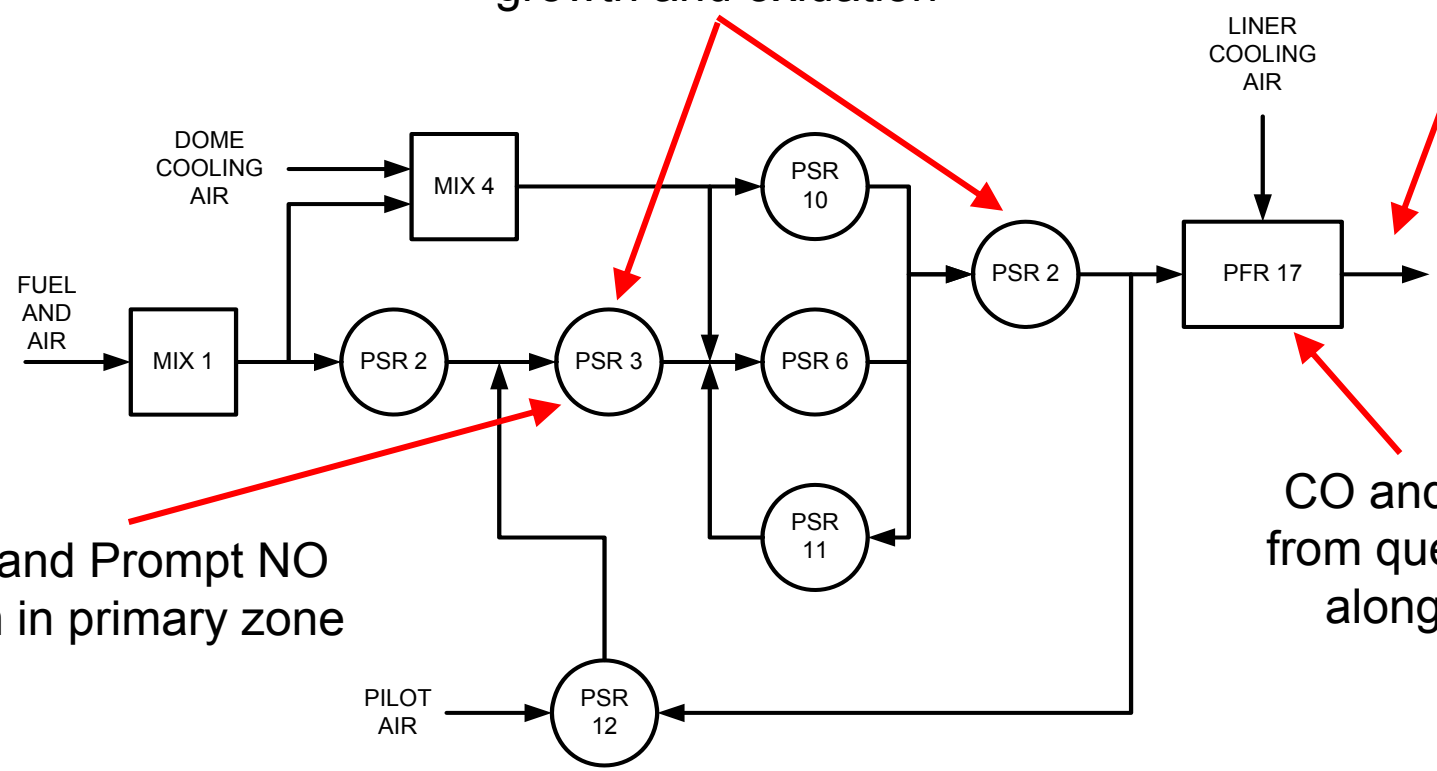

Thermal and Prompt NO formation in primary zone

CO and UHC from quenching along wall

reaction DESIGN

Use ERN for Parameter Studies

Will animate these to fly-in

Adjust Individual Reactor Conditions

Adjust Cooling Air Flow Conditions

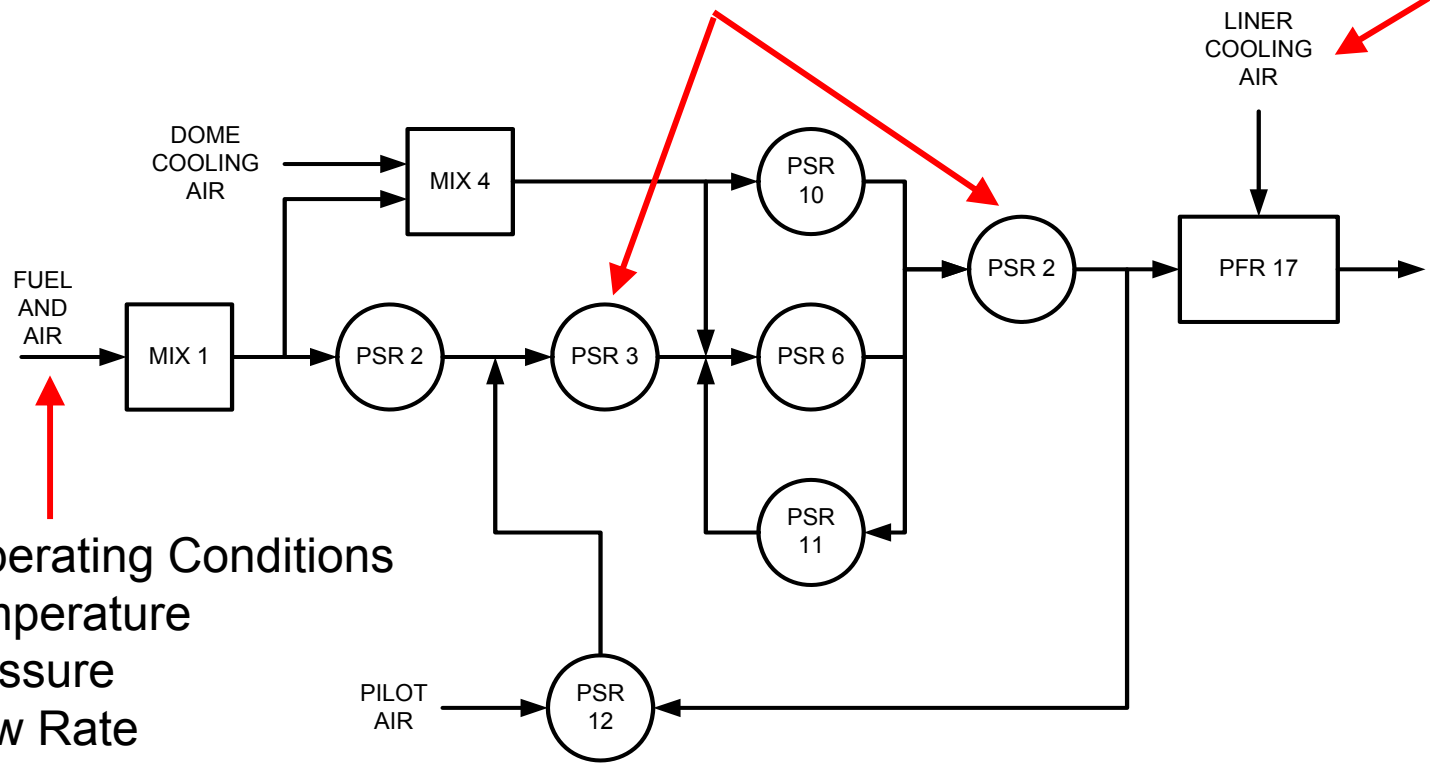

Adjust Operating Conditions

- Temperature
- Pressure
- Flow Rate

reaction DESIGN

Use ERN for Alternative Fuels

Input Variable
Fuel Composition
(e.g. H2 and CO from Syngas)

Will animate these to fly-in

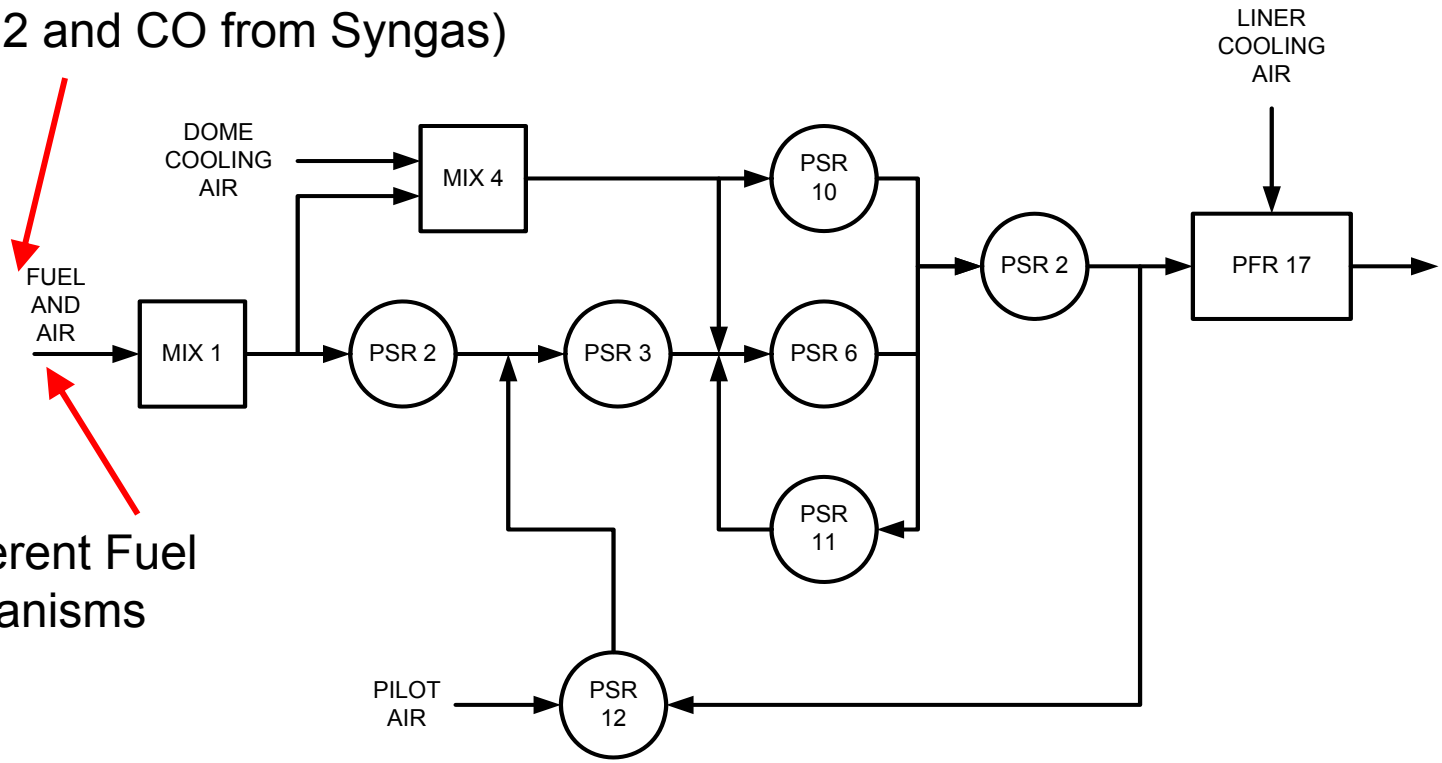

Use Different Fuel
Mechanisms

reaction
DESIGN

Real Fuels are Complex Mixtures

- **100s of fuel components**

+ 3 more pages …

Hydrocarbon composition of fuels and emissions: Hydrocarbon speciation of industry average gasoline, EPA certification gasoline, and M-85 (85% methanol, 15% gasoline).[a]

		FUELS			EXHAUST EMISSIONS			EVAPORATIVE EMISSIONS			COMPSTE
CAS #	Compound	Ind Avg Gas	Cert Gas	M-85	Cold Start	Hot Stab	Hot Start	Diurnal	Hot Soak	Running Losses	
00074-82-8	Methane	0.000	0.000	0.000	0.0895	0.5446	0.2871	0.0078	0.0099	0.0084	0.1552
00074-85-1	Ethene	0.000	0.000	0.000	0.0790	0.0072	0.0522	0.0000	0.0000	0.0000	0.0269
00074-86-2	Ethyne	0.000	0.000	0.000	0.0376	0.0000	0.0000	0.0000	0.0000	0.0000	0.0087
00074-84-0	Ethane	0.000	0.000	0.000	0.0224	0.0411	0.0439	0.0006	0.0000	0.0000	0.0183
00050-00-0	Formaldehyde	0.000	0.000	0.000	0.0060	0.0298	0.0123				0.0080
00115-07-1	Propene	0.000	0.000	0.000	0.0397	0.0000	0.0101	0.0000	0.0000	0.0000	0.0107
00074-98-6	Propane	0.001	0.001	0.001	0.0000	0.0000	0.0000	0.0027	0.0004	0.0000	0.0004
00463-49-0	Propadiene	0.000	0.000	0.000	0.0013	0.0000	0.0000	0.0000	0.0000	0.0000	0.0003
00074-99-7	Propyne	0.000	0.000	0.000	0.0000	0.0000	0.0000	0.0000	0.0000	0.0000	0.0000
00075-28-5	2M-Propane	0.083	0.086	0.016	0.0004	0.0000	0.0018	0.0230	0.0035	0.0231	0.0092
00075-07-0	Acetaldehyde	0.000	0.000	0.000	0.0035	0.0216	0.0071				0.0054
00115-11-7	2M-Propene	0.014	0.015	0.000	0.0176	0.0000	0.0000	0.0000	0.0000	0.0000	0.0041
00106-98-9	1-Butene	0.000	0.000	0.000	0.0034	0.0000	0.0000	0.0000	0.0000	0.0000	0.0008
00106-99-0	1,3-Butadiene	0.000	0.000	0.000	0.0068	0.0000	0.0000	0.0000	0.0000	0.0000	0.0016
00106-97-8	Butane	4.650	4.085	1.012	0.0349	0.0665	0.0931	0.5270	0.2116	0.7337	0.2953
00624-64-6	t-2-Butene	0.001	0.001	0.000	0.0038	0.0000	0.0000	0.0000	0.0000	0.0000	0.0009
00463-82-1	2,2-DM-Propane	0.034	0.067	0.000	0.0006	0.0000	0.0000	0.0004	0.0000	0.0019	0.0006
00107-00-6	1-Butyne	0.000	0.000	0.000	0.0000	0.0000	0.0000	0.0000	0.0033	0.0000	0.0003
00590-18-1	c-2-Butene	0.004	0.001	0.000	0.0016	0.0000	0.0023	0.0000	0.0006	0.0000	0.0008
00563-45-1	3M-1-Butene	0.021	0.016	0.000	0.0000	0.0000	0.0000	0.0003	0.0000	0.0000	0.0000
00064-17-5	Ethanol	0.000	0.000	0.000	0.0000	0.0000	0.0000	0.0000	0.0000	0.0000	0.0000
00078-78-4	2M-Butane	4.417	2.306	0.567	0.0294	0.0458	0.0594	0.1030	0.0918	0.0888	0.0660
00503-17-3	2-Butyne	0.000	0.000	0.000	0.0000	0.0000	0.0000	0.0000	0.0000	0.0000	0.0000
00109-67-1	1-Pentene	0.146	0.114	0.019	0.0008	0.0000	0.0000	0.0019	0.0016	0.0017	0.0010
00563-46-2	2M-1-Butene	0.319	0.244	0.042	0.0020	0.0000	0.0008	0.0060	0.0058	0.0030	0.0026
00109-66-0	Pentane	3.385	1.212	0.440	0.0219	0.0123	0.0364	0.0521	0.0669	0.0317	0.0329
00078-79-5	2M-1,3-Butadiene	0.013	0.003	0.001	0.0017	0.0000	0.0000	0.0040	0.0007	0.0000	0.0005
00646-04-8	t-2-Pentene	0.617	0.384	0.083	0.0037	0.0000	0.0000	0.0094	0.0124	0.0032	0.0040
00558-37-2	3,3-DM-1-Butene	0.010	0.002	0.001	0.0000	0.0000	0.0000	0.0000	0.0000	0.0000	0.0000
02738-19-4	2M-2-Hexene	0.338	0.205	0.051	0.0000	0.0000	0.0000	0.0000	0.0000	0.0000	0.0000
03899-36-3	3M-t-3-Hexene	0.000	0.000	0.000	0.0000	0.0000	0.0000	0.0000	0.0000	0.0000	0.0000
14686-13-6	t-2-Heptene	0.131	0.078	0.019	0.0000	0.0000	0.0000	0.0000	0.0000	0.0000	0.0000
00816-79-5	3E-c-2-Pentene	0.061	0.035	0.009	0.0000	0.0000	0.0000	0.0000	0.0000	0.0000	0.0000
00107-39-1	2,4,4-TM-1-Pentene	0.104	0.061	0.016	0.0000	0.0000	0.0000	0.0000	0.0004	0.0000	0.0000
10574-37-5	2,3-DM-2-Pentene	0.000	0.000	0.000	0.0000	0.0000	0.0000	0.0000	0.0000	0.0000	0.0000
06443-92-1	c-2-Heptene	0.121	0.073	0.018	0.0000	0.0000	0.0000	0.0000	0.0000	0.0000	0.0000
00108-87-2	M-Cyclohexane	0.542	0.285	0.081	0.0023	0.0000	0.0000	0.0000	0.0013	0.0000	0.0007
00590-73-8	2,2-DM-Hexane	0.063	0.032	0.008	0.0000	0.0000	0.0000	0.0000	0.0000	0.0000	0.0000
00107-40-4	2,4,4-TM-2-Pentene	0.011	0.000	0.000	0.0000	0.0000	0.0000	0.0000	0.0000	0.0000	0.0000
00592-13-2	2,5-DM-Hexane	0.552	0.702	0.081	0.0034	0.0000	0.0000	0.0000	0.0011	0.0014	0.0012
01640-89-7	E-Cyclopentane	0.074	0.043	0.011	0.0005	0.0000	0.0000	0.0000	0.0000	0.0000	0.0001
00589-43-5	2,4-DM-Hexane	0.707	0.885	0.103	0.0051	0.0000	0.0009	0.0000	0.0014	0.0017	0.0018
00563-16-6	3,3-DM-Hexane	0.192	0.104	0.027	0.0000	0.0000	0.0000	0.0000	0.0000	0.0000	0.0000
00565-75-3	2,3,4-TM-Pentane	2.157	3.288	0.255	0.0129	0.0000	0.0082	0.0030	0.0083	0.0066	0.0069
00108-88-3	Toluene	5.518	6.743	0.934	0.0754	0.0347	0.0588	0.0470	0.1363	0.0109	0.0528

…

reaction DESIGN

ERN Use in Emissions Predictions

- **ERNs are used widely to model combustion systems**
- **Application to emissions predictions:**
  - Gas turbines:
    - Solar Turbines
    - GE Energy
    - Pratt & Whitney[1]
  - Internal Combustion Engines
    - Lawrence Livermore NL[2]
  - Industrial Furnaces
    - ENEL, S.p.A.[3]

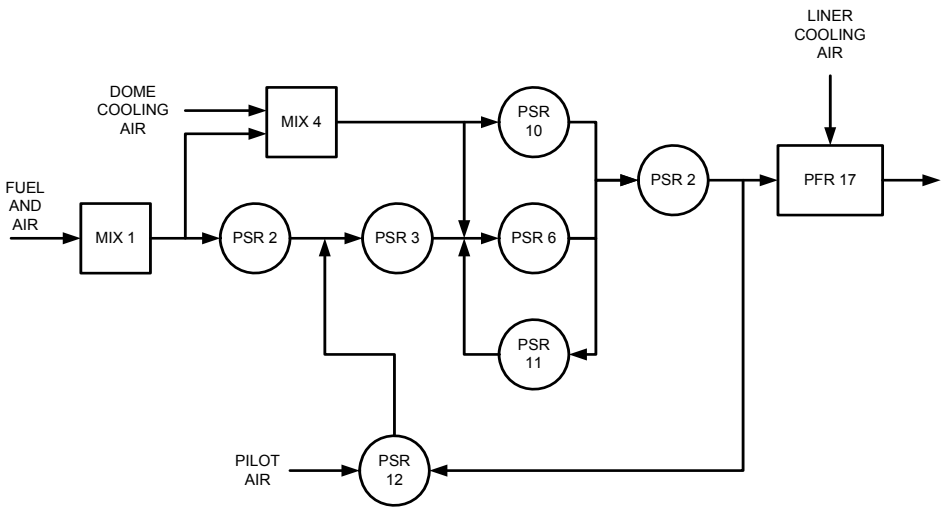

1) www.netl.doe.gov/publications/proceedings/99/99ats/2-8.pdf
2) www.osti.gov/fcvt/deer2000/acevespa.pdf
3) Falcitelli, M., S. Pasini, N. Rossi, L. Tognotti, *Applied Thermal Engineering* 22 (2002) 971-979

reaction DESIGN

ERN Approach Provides Accuracy for Trace Species

- **CFD + ERN have produced accurate results for a wide range of combustors and for a variety of fuels:**

Study	System	Fuel	Accuracy
Niksa 2002, 2003	Pilot-scale flame	Coal	±10% for 110-460 ppm NO_x
Falcitelli 2002	Glass melting furnace	Nat Gas	±2% for 550-800 ppm NO_x
Faravelli 2001	Power plant furnace	Nat Gas Oil	±10% for 50-100 ppm NO_x ±6% for 110-210 ppm NO_x
Benedetto 2000	Power plant furnace	Oil	±3% for 90-100 ppm NO_x

reaction DESIGN

Key Design Features for Gas Turbines

Fuel Flexibilty

(NG, distillate, jet fuel, syngas)

Combustion Air

(O_2+N_2+CO_2)

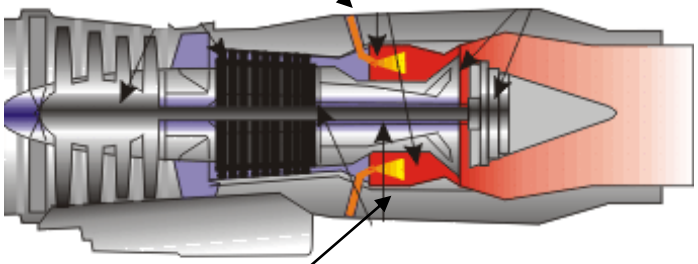

CO_2+H_2O

Thrust, Power

Emissions

(NO_X, CO, UHC, VOC, Soot/Particles)

Combustion Stability
- **Lean Blow Off**
- **Flashback**
- **Ignition**

All of these factors are driven by detailed chemistry

reaction DESIGN

The Clean Combustion Chemistry Dilemma

- **Effective simulation reduces development time and cost while fueling innovation**
- **Accurate combustion simulation requires accurate chemistry**
  - Ignition
  - Emissions
  - Soot
- **CFD can't handle accurate chemistry**

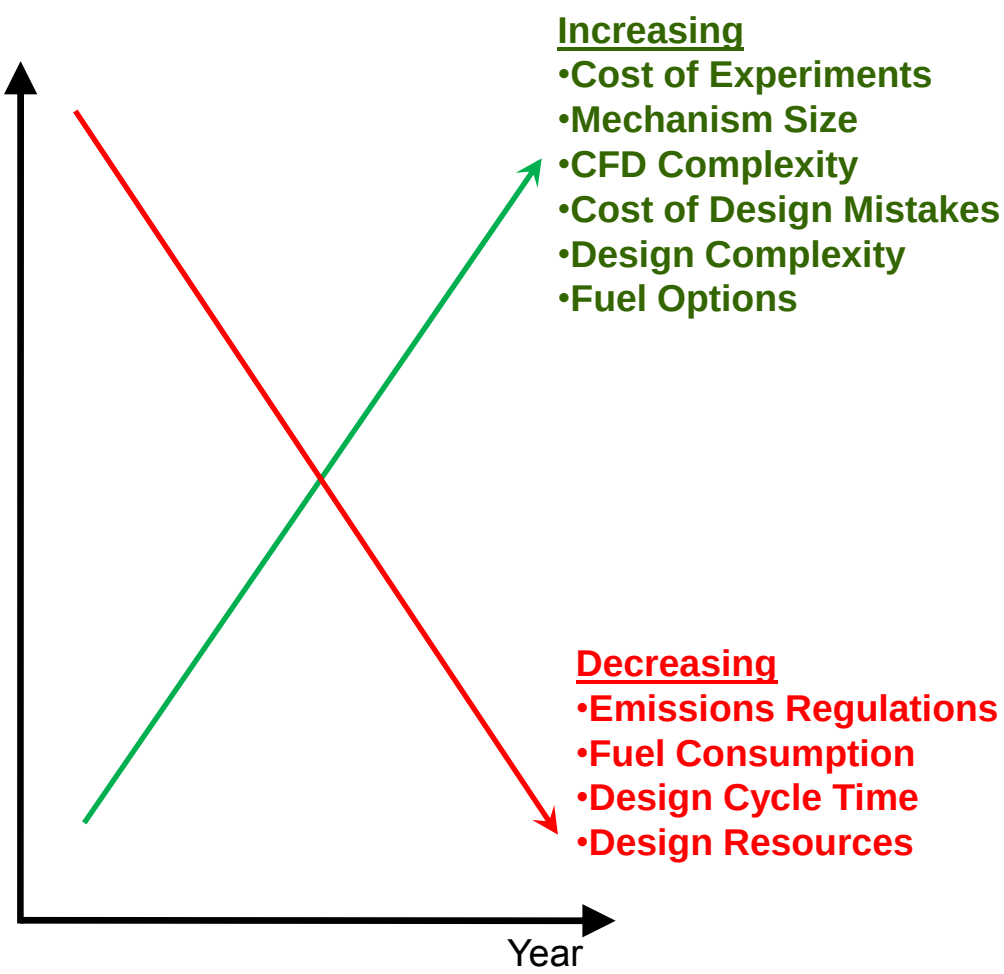

reaction DESIGN

CFD Does Not Allow Use of Accurate Fuels

Kerosene and other gas turbine fuels are a complex mixture of hundreds of species

Currently modeled in CFD as a single component fuel

Representative examples of Major Classes of molecules in kerosene fuels

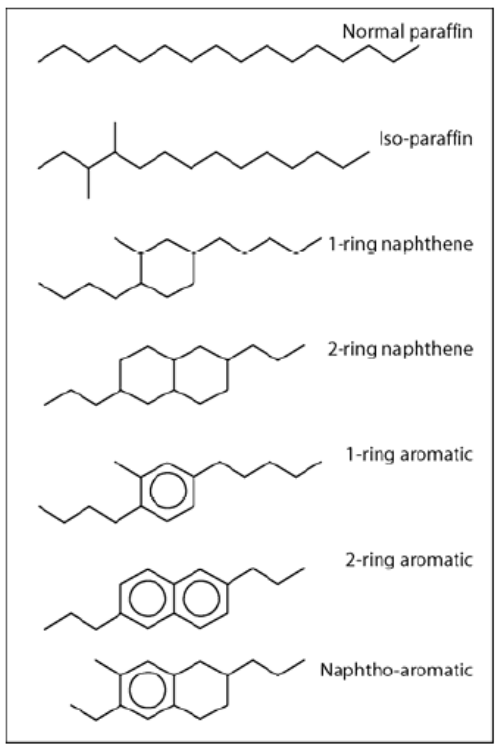

*

isooctane

* S. Sato et al, *Fuel*, 83, p.1915, 2004.

40

reaction DESIGN